H990 TYPE: F13 for FACE FIX SASH

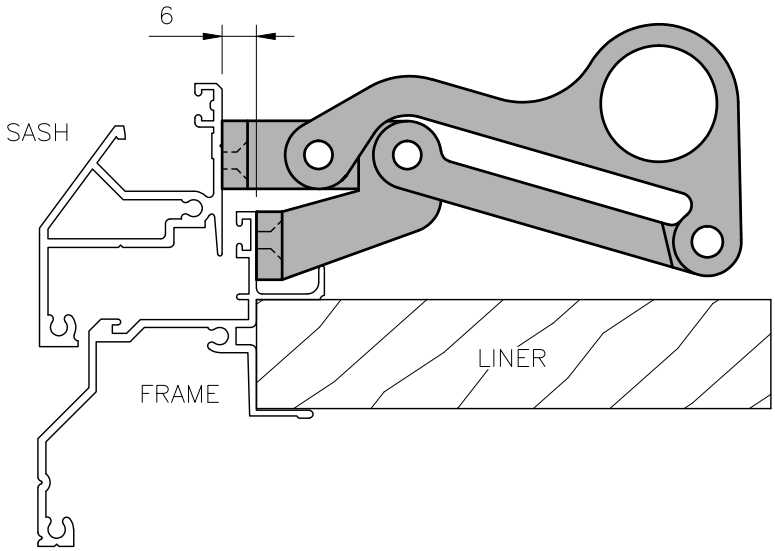

FIX WITH 4x 8G SCREWS.
SCREW HOLE POSITIONS:

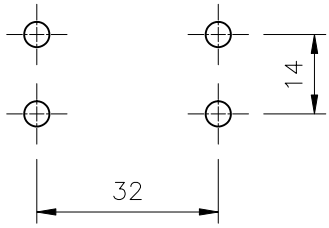

H991 TYPE: S43 for SUB FIX SASH

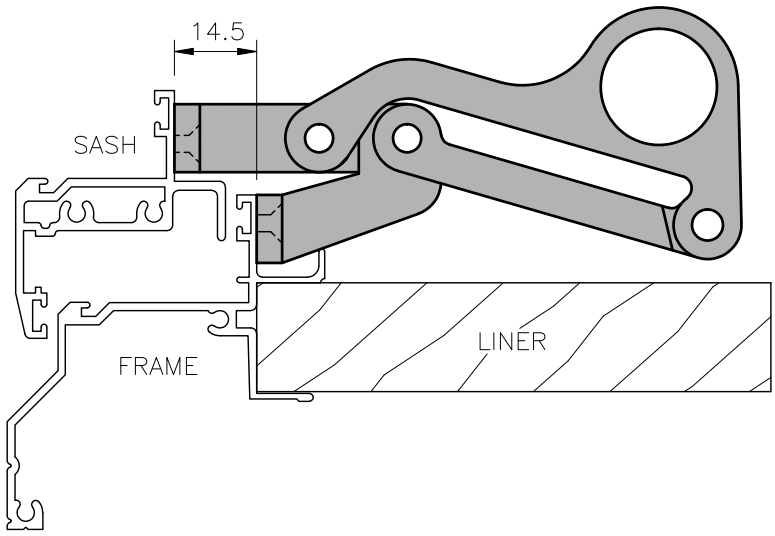

FIX WITH 4x 8G SCREWS.
SCREW HOLE POSITIONS:

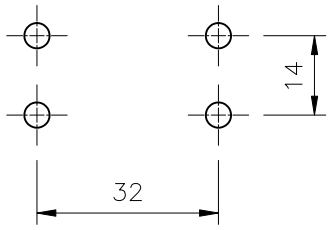

H992 TYPE: T12 for TIMBER SASH

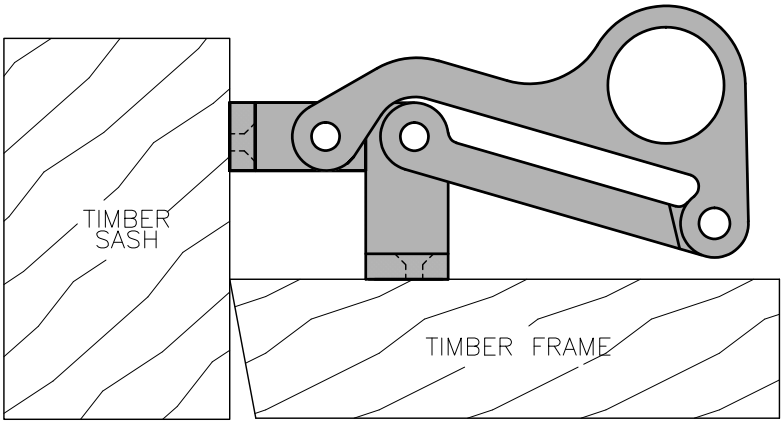

FIX WITH 4x 8G SCREWS.
SCREW HOLE POSITIONS:

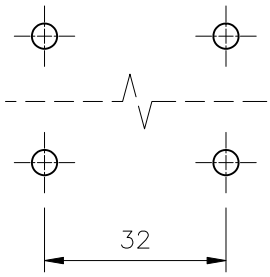

COPYRIGHT SPECTRUM ALUMINIUM CURVING (2000) LTD

SCALE 3:4

spectrum
architectural metals
Phone 0800 355 366
Fax 0508 287 837
info@spectrum.co.nz
www.spectrum.co.nz